Date: 050109	Sign. SJO	Scale: 1:40	No. T11346

UPLIFTING COMPANY

AUTOP STENHOJ
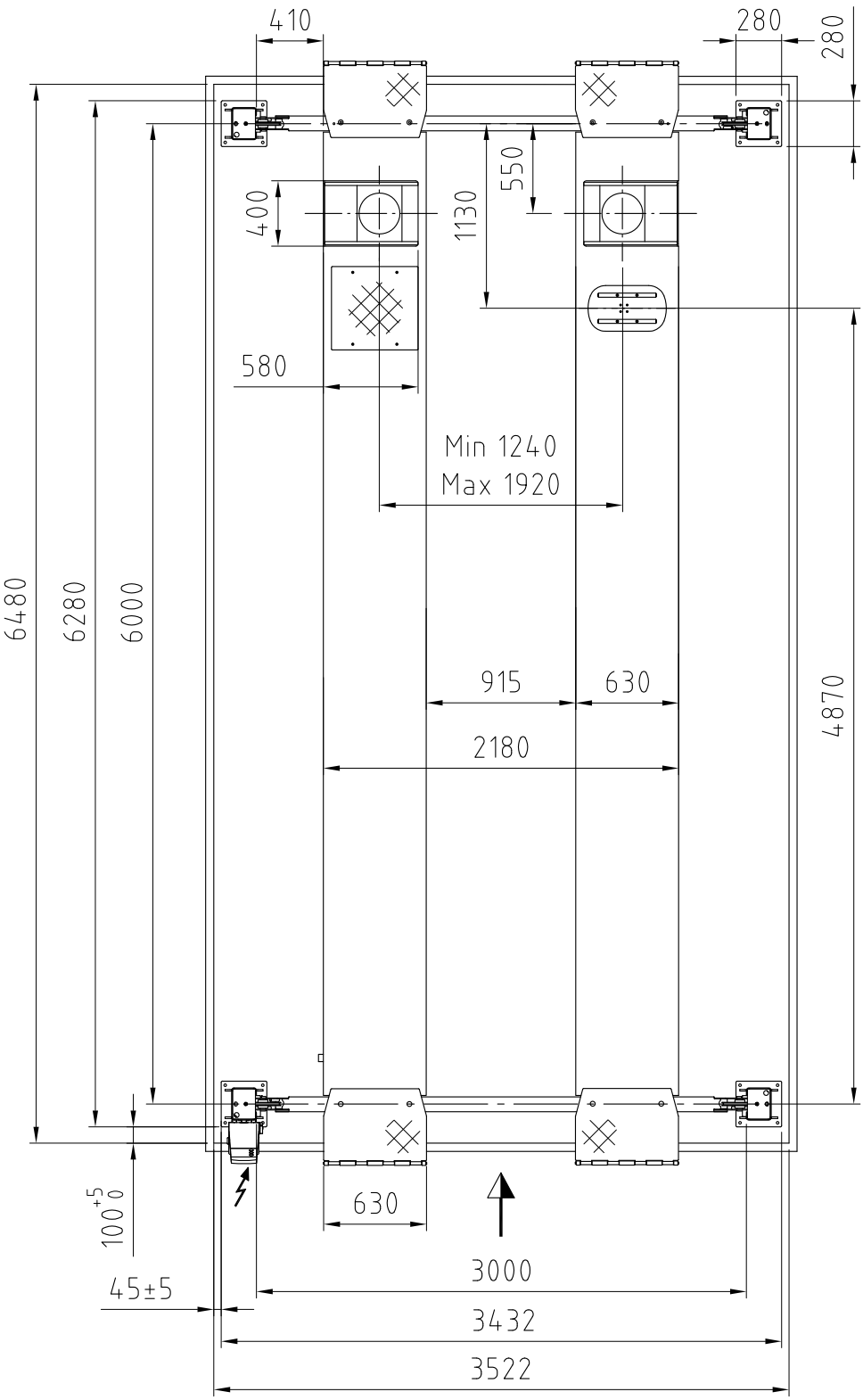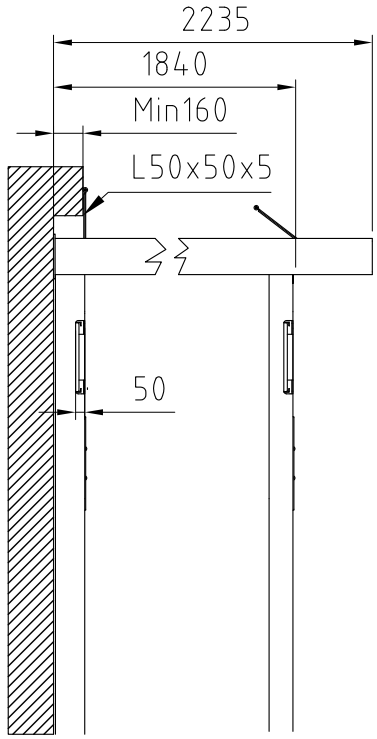
Major ATL 5230-60
5200 kg.
(recessed)
Rev. date: 150514