Date: 080714	Sign. ALJ	Scale: 1:40	No. T11648

UPLIFTING COMPANY

AUTOP STENHOJ
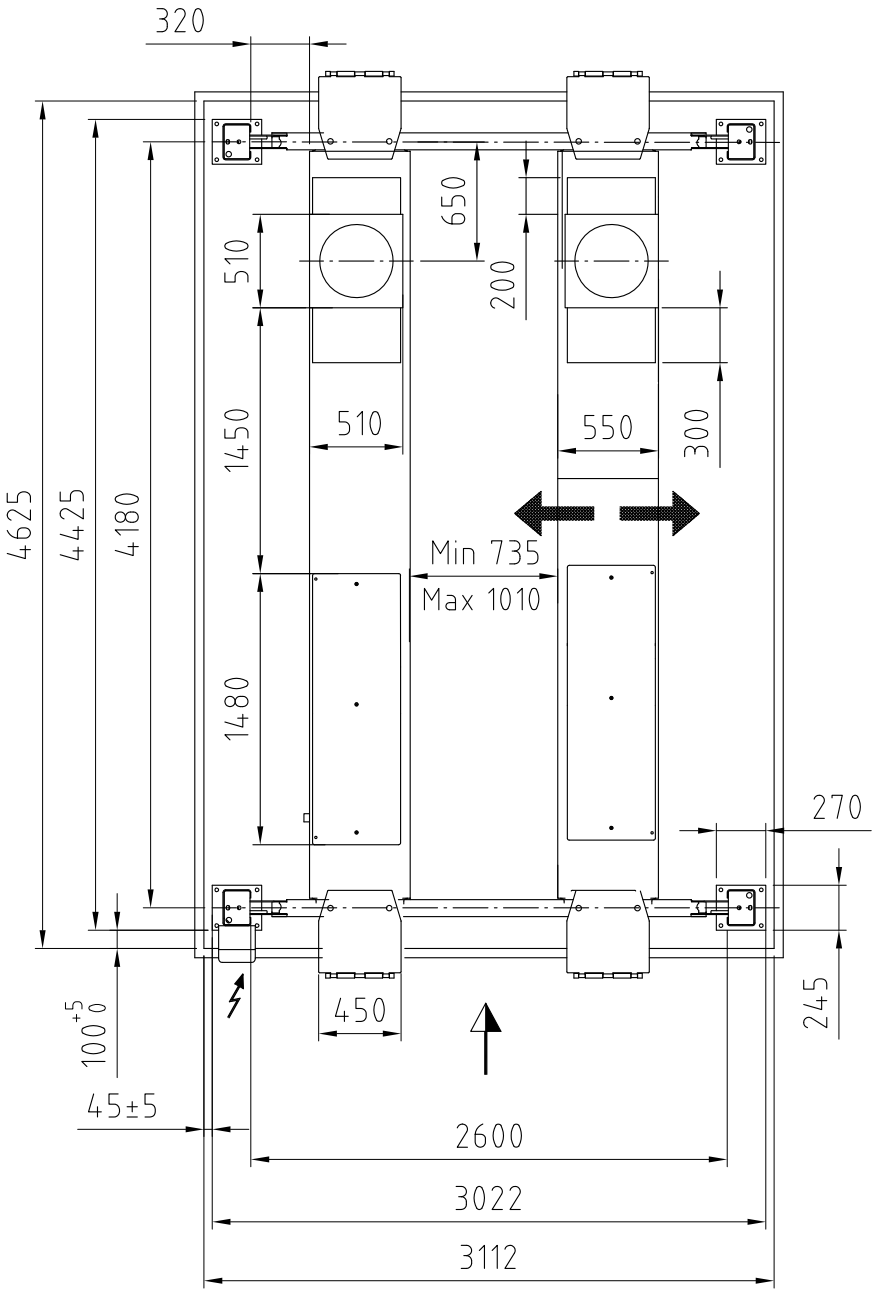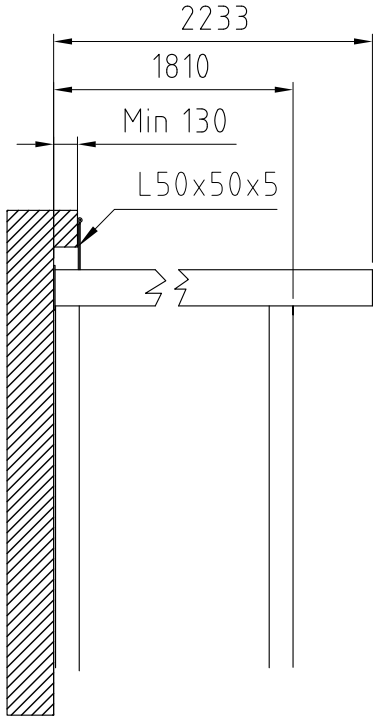
Major 4026-42W
4000 kg
(recessed)
Rev. date: