UPLIFTING COMPANY

AUTOP STENHOJ

Masterlift 2.35 Combi Check-in K.A.1335
bilateral drive-on ramps

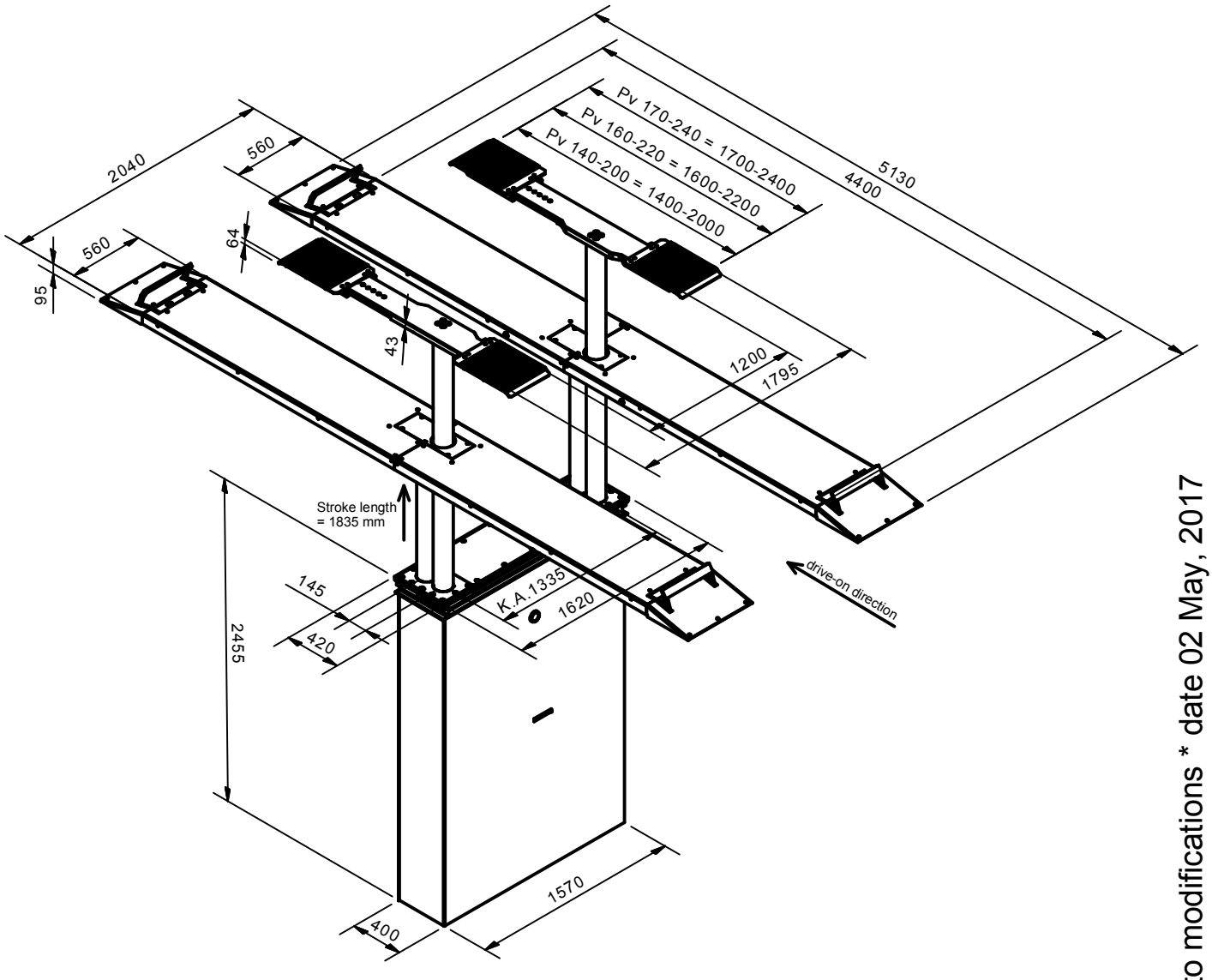

Dimension sketch incl. specification of level for drive-over height.

constuctional changes are subject to modifications * date 02 May, 2017